PROCESS GAS SAMPLING SYSTEMS

1/12/2016

Engineered Solutions

Sample conditioning system

- System functions
- How it works
- Key components
- Design and layout
- Pre-conditioning components
- Custom solutions

System functions

- To transport clean sample gas to the sensor
- To condition the sample so it is compatible with the sensor
- To switch from one stream to another
- To allow for proper calibration
- To return the sample back to the process or to disposal
- To allow for the effects of corrosion and other reactions

How it works, Configuration #1

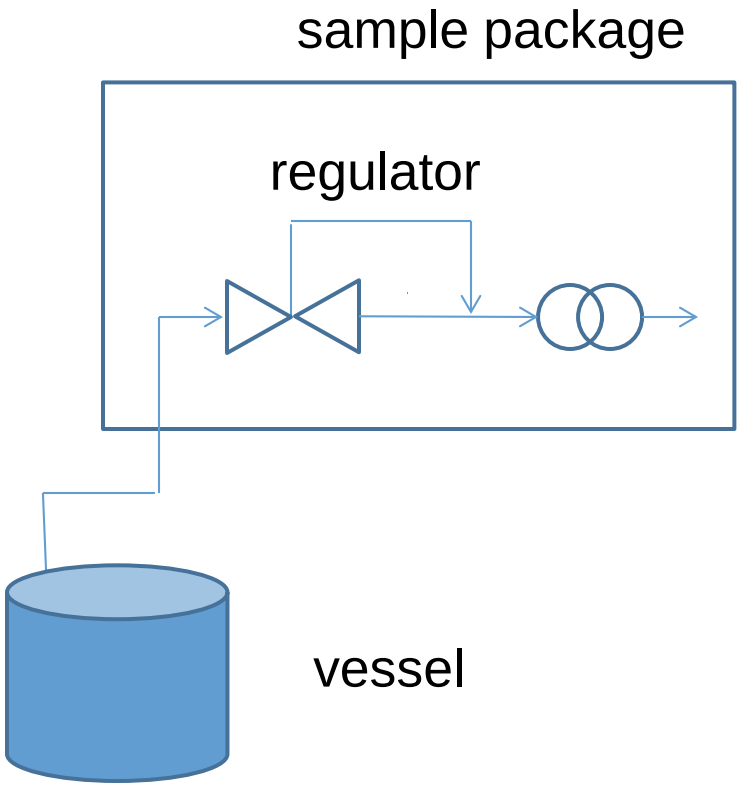

- Positive pressure-driven sampler
  - Process pressure pushes the sample to the sensor
  - For process operating pressures ≥ 5 psig
  - A pressure reducing regulator controls the pressure and flow through the system

Neutronics Gas Analysis Solutions

How it works, Configuration #2

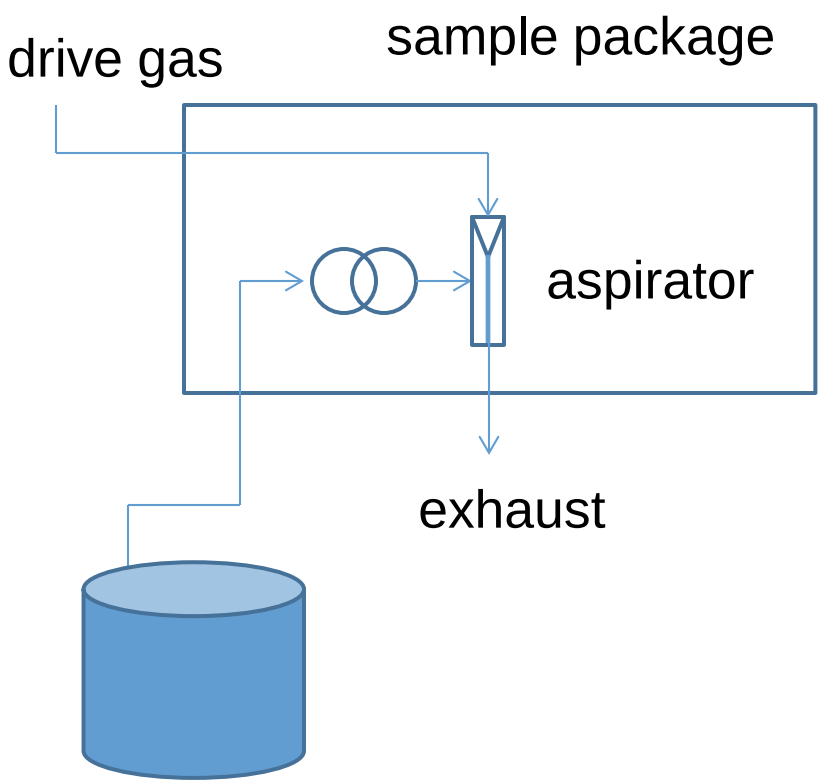

- Aspirator-driven sampler
  - Uses air or nitrogen as a drive gas to draw the sample to the sensor
  - Intrinsically safe aspirator with no moving parts
  - For process operating pressures: -25" WC to +5 psig

Neutronics Gas Analysis Solutions

How it works, Configuration #3

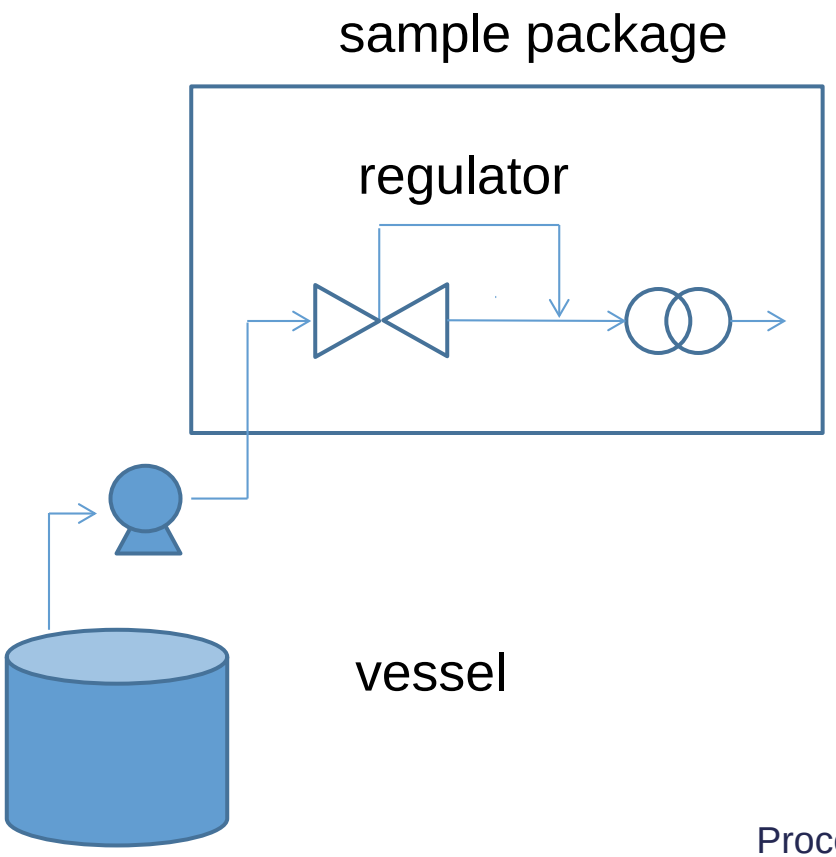

- Vacuum pump-driven sampler
  - Used when no compressed gas is available or when running at high vacuum
  - Separate vacuum pump draws sample to the sensor
  - For process operating pressures > 25"

Neutronics Gas Analysis Solutions

Neutronics
Gas Analysis Solutions

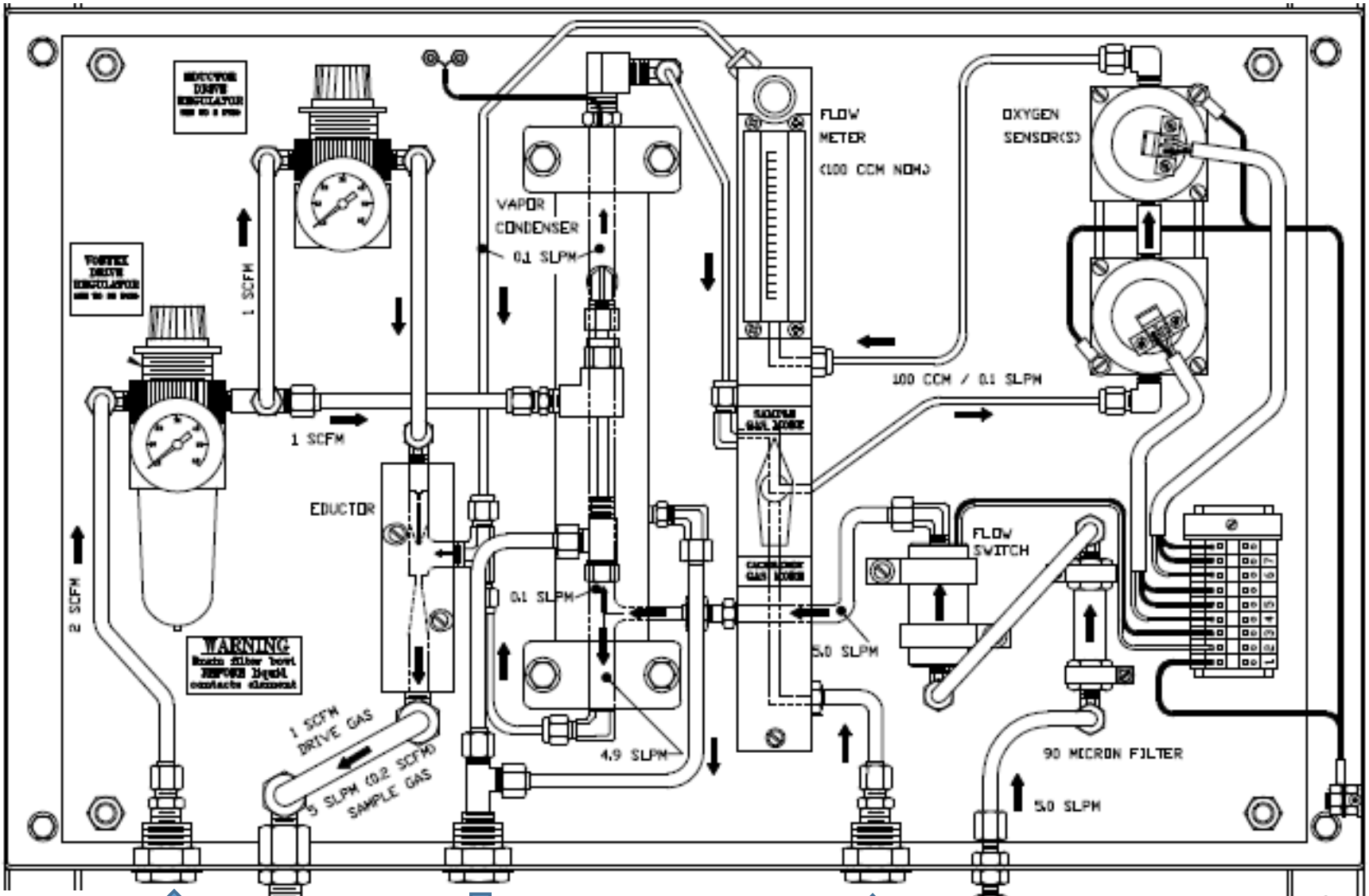

drive gas inlet

sample gas exhaust

vortex exhaust

CAL gas inlet

sample gas inlet

Neutronics
Gas Analysis Solutions

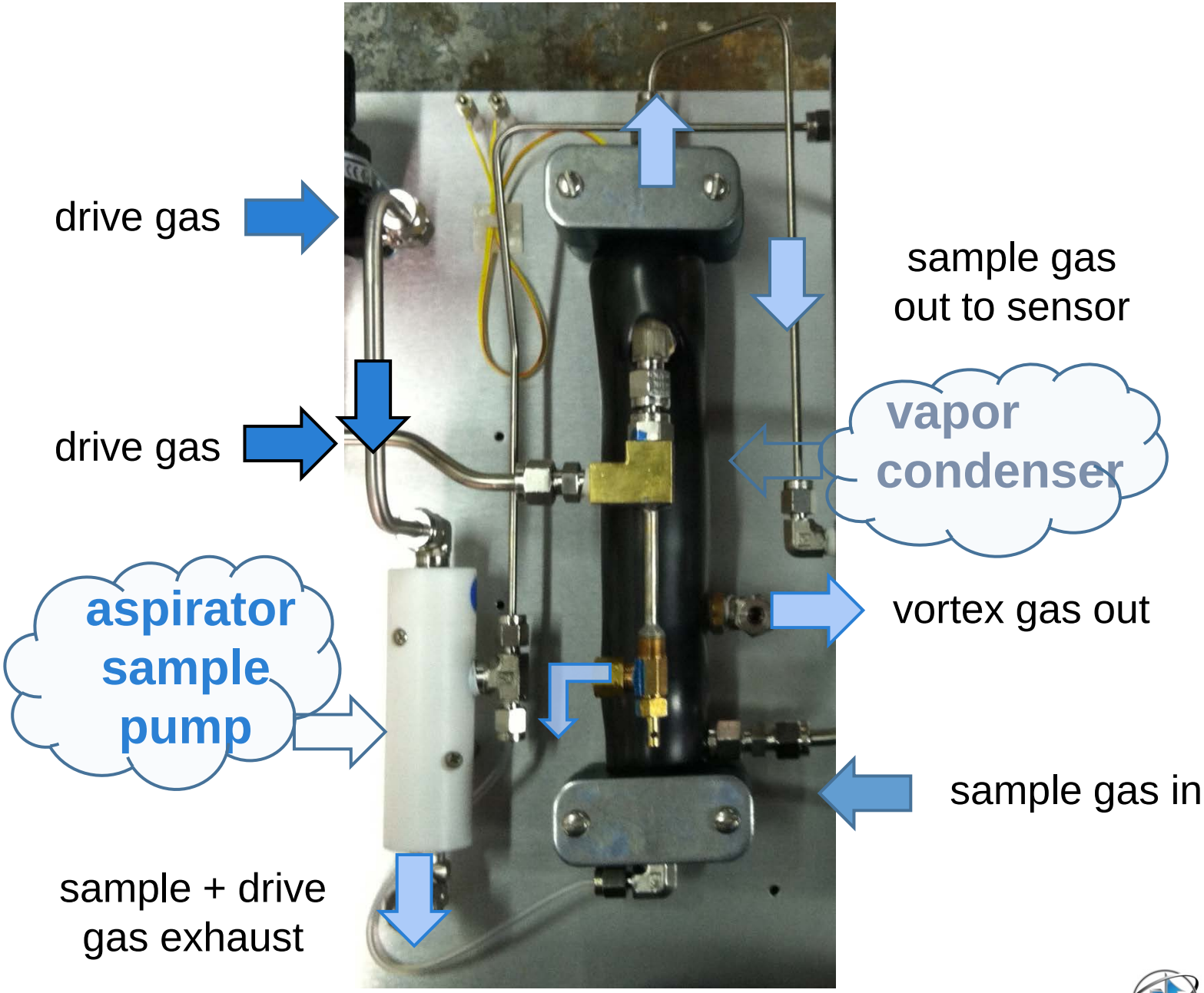

Neutronics Gas Analysis Solutions

Eductor

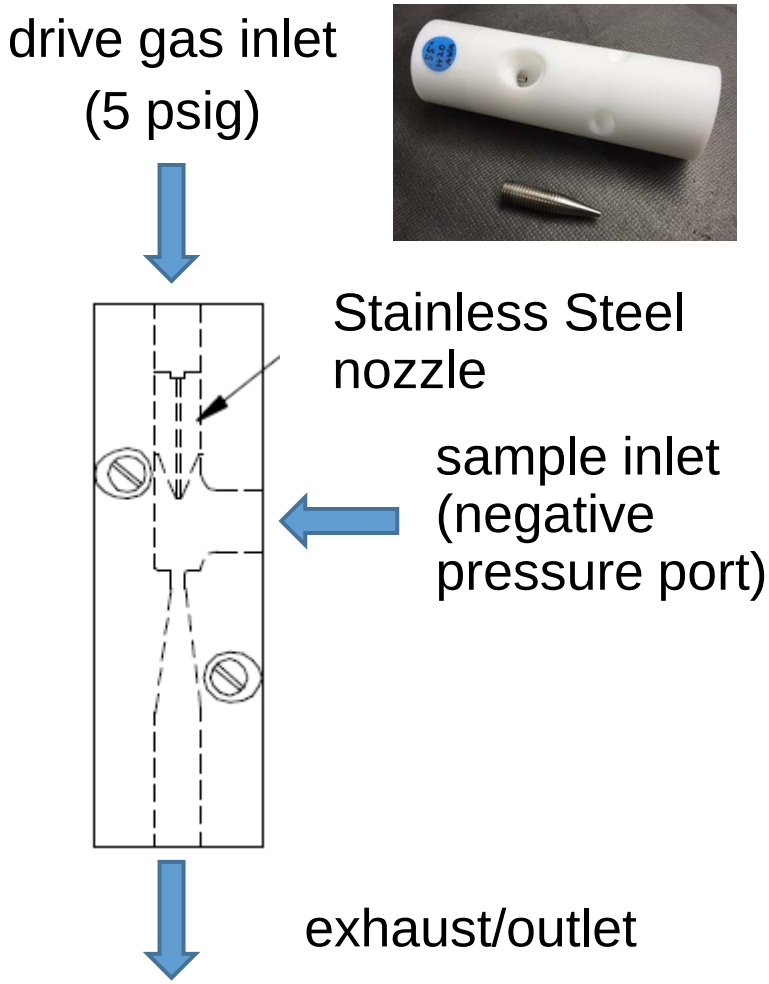

- No moving parts
- Produces vacuum by means of the Venturi effect
- Uses air or N2 as a drive gas to draw the sample to the sensor

Neutronics
Gas Analysis Solutions

Vapor Condenser

- Air-cooled heat exchanger
- Designed to cool the sample gas and remove vapors and condensate
- Splits the gas flow into a sample flow and a bypass flow

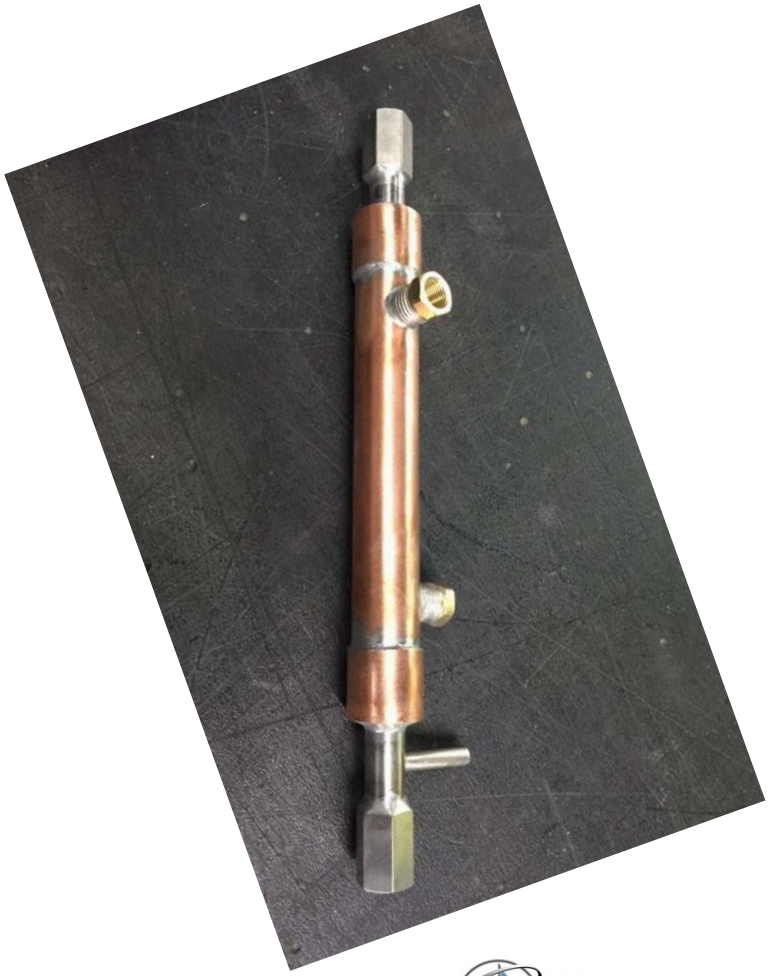

Neutronics
Gas Analysis Solutions

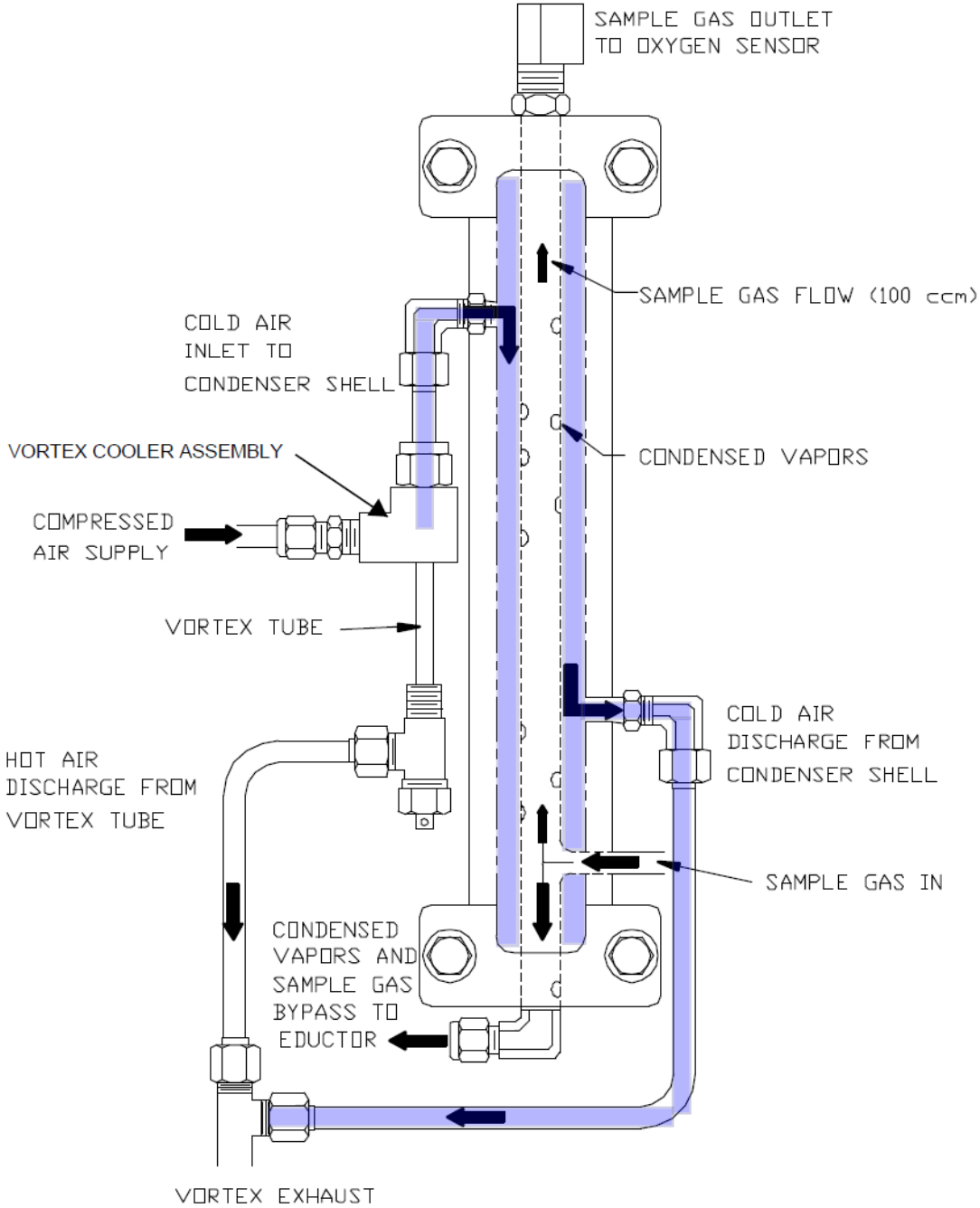

Neutronics
Gas Analysis Solutions

Vortex cooler assembly

- Provides refrigeration
- Splits the air flow into a cold stream and a hot stream
- Temperature drop of 20 to 30° F
- No moving parts

Neutronics
Gas Analysis Solutions

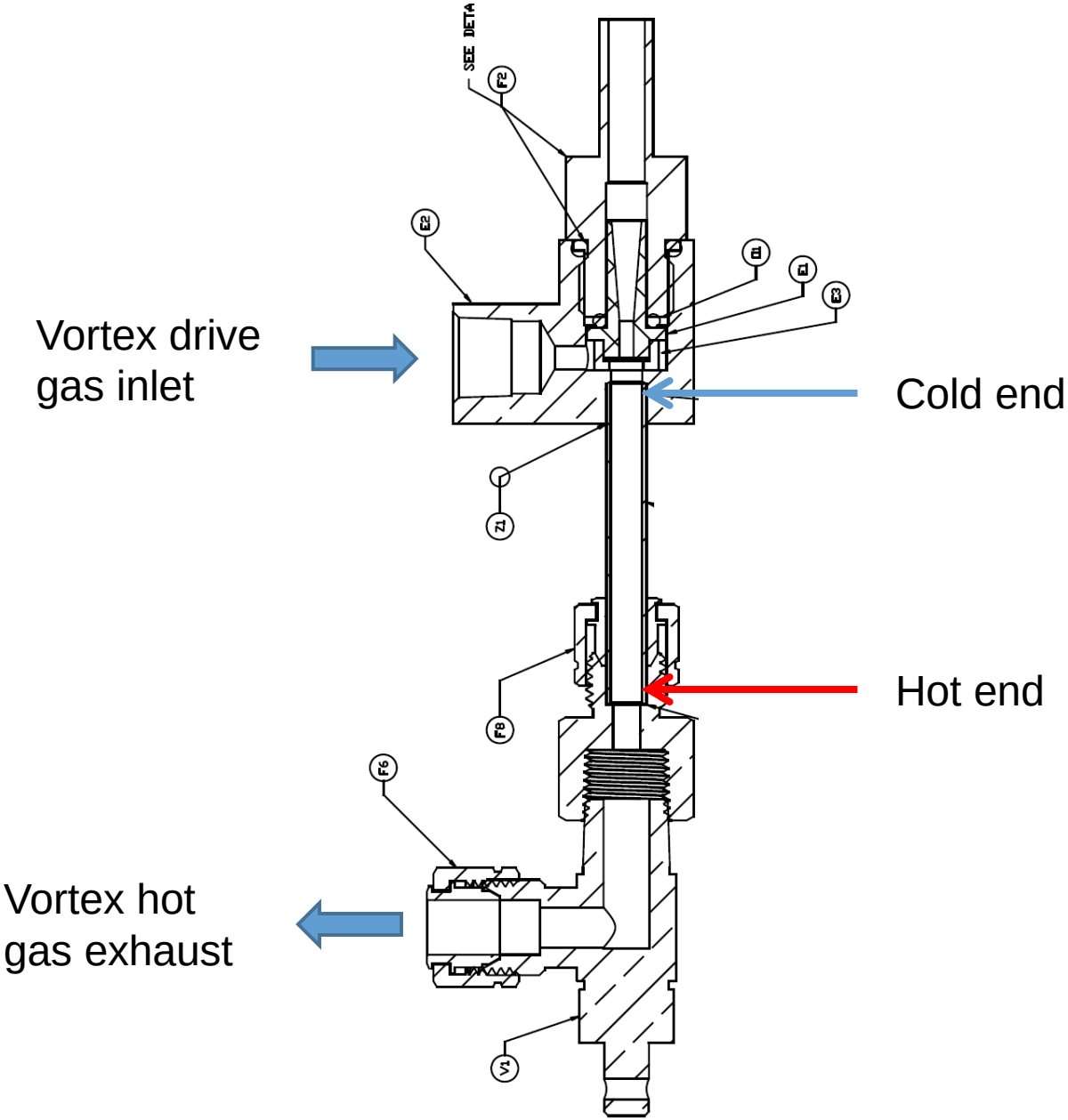
Vortex drive gas inlet
Cold end
Hot end
Vortex hot gas exhaust
SEE DETA
F2
E2
D1
E1
E3
Z1
F9
F6
V1

flow meter
(100 ccm)

sample gas from
vapor
condenser

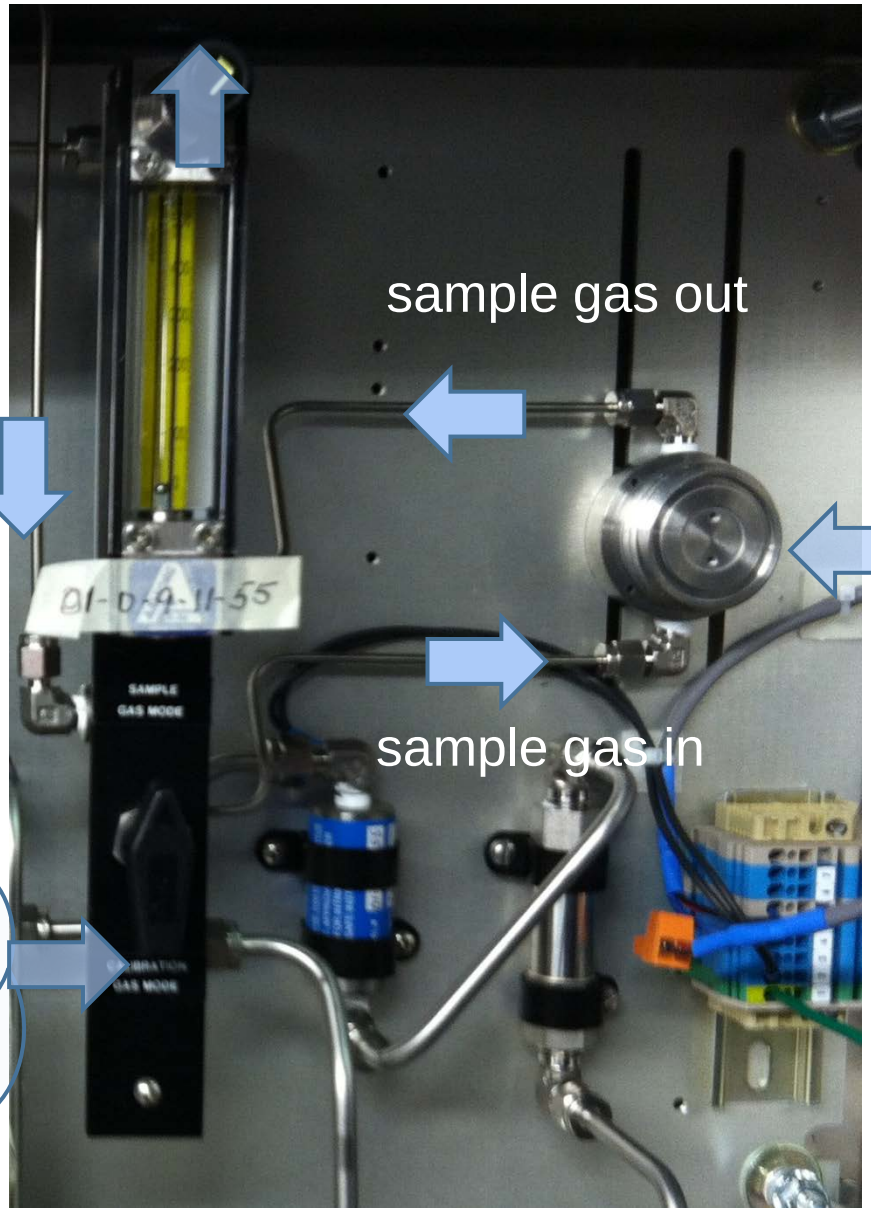

O2 sensor
connection

selector
valve for
sample gas
or CAL gas

Neutronics
Gas Analysis Solutions

Inline filter (F Series)

Sintered

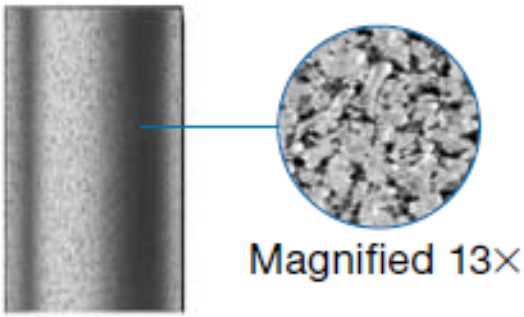

- Traps fine particles in a dense matrix
- 316 SS construction

- Filters debris from sample gas line
- Replaceable sintered metal element
- 90 micron pore size

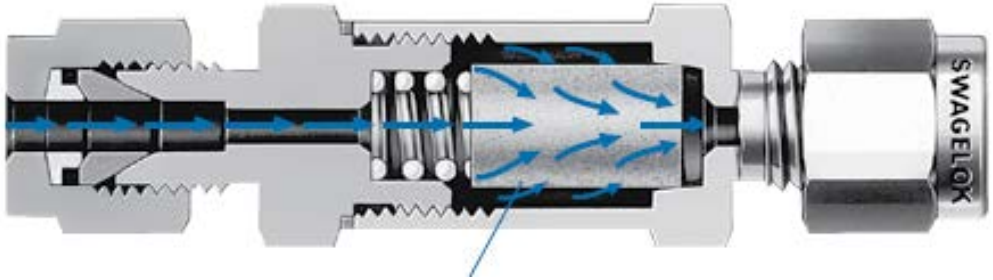

Neutronics
Gas Analysis Solutions

Flow (Reed) Switch

- Provides alarm for inadequate flow
- Intrinsically safe
- Contacts open when flow falls below the preset level
- Setpoints: 1.8/1.0
  - Ascending, 1.8 slm
  - Descending, 1.0 slm
- Teflon float with magnet

Neutronics
Gas Analysis Solutions

Flow switch

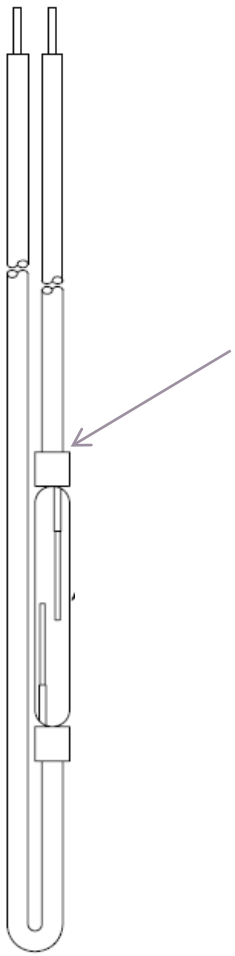

reed switch assembly

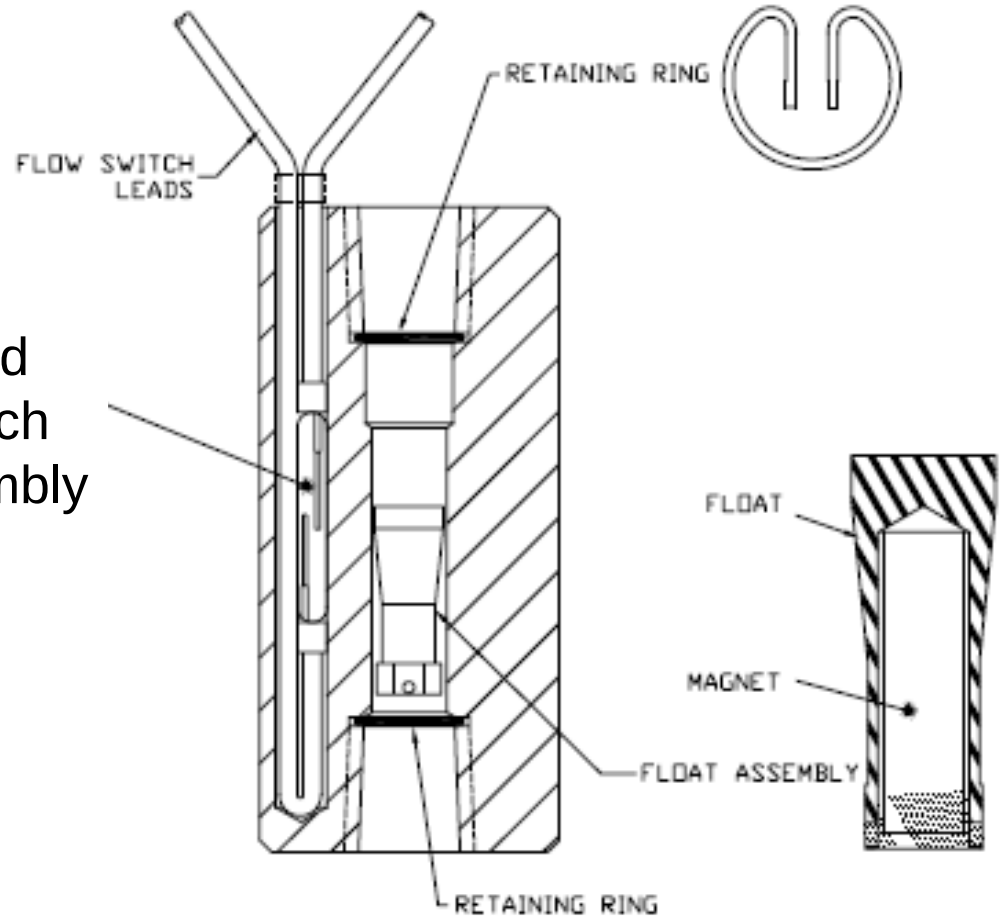

Neutronics Gas Analysis Solutions

Coalescing prefilter

- Provides particulate and mist removal
- Vertically mounted at a low point in the sample line
- For positive pressure apps – include a drip leg and restrictor valve
- For vacuum apps – include an autodrain

Neutronics
Gas Analysis Solutions

Coalescing prefilter

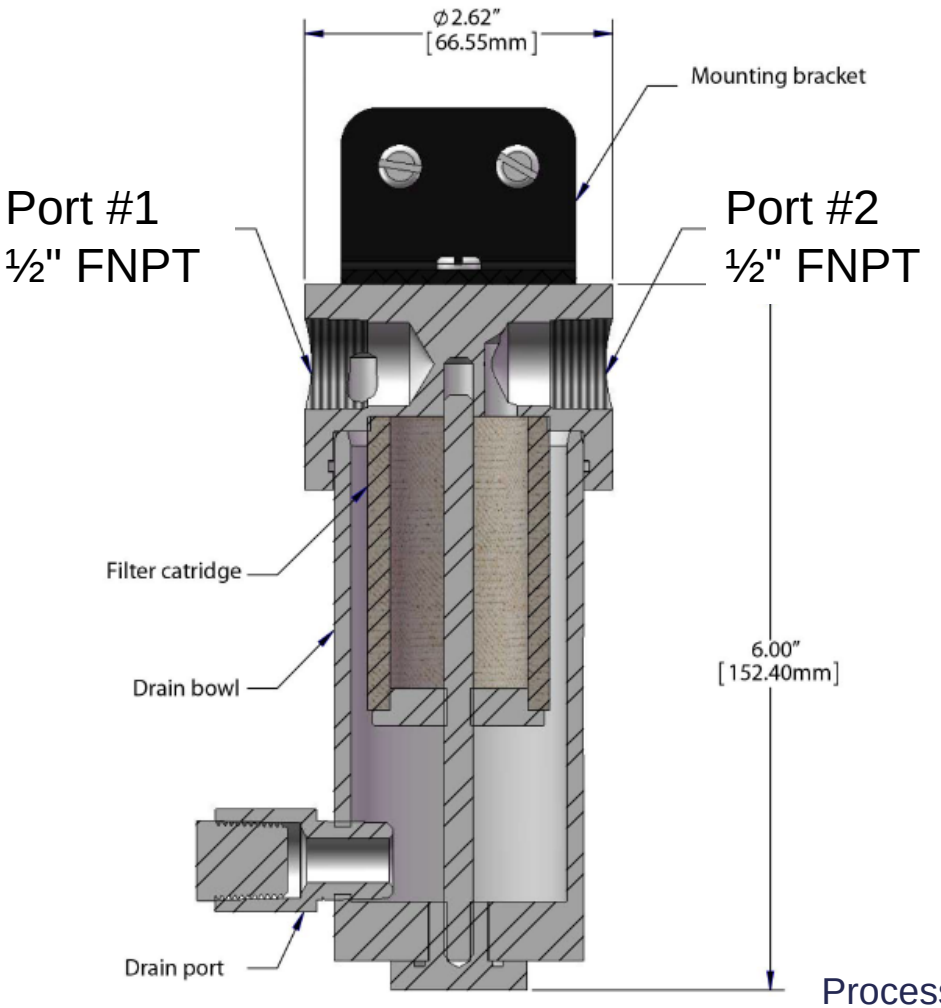

- Solvent-based
  - Inside-out flow direction
    - Inlet → port #1
    - Outlet → port #2
- Powder-based
  - Outside-in
    - Inlet → port #2
    - Outlet → port #1

Neutronics Gas Analysis Solutions

Liquid trap

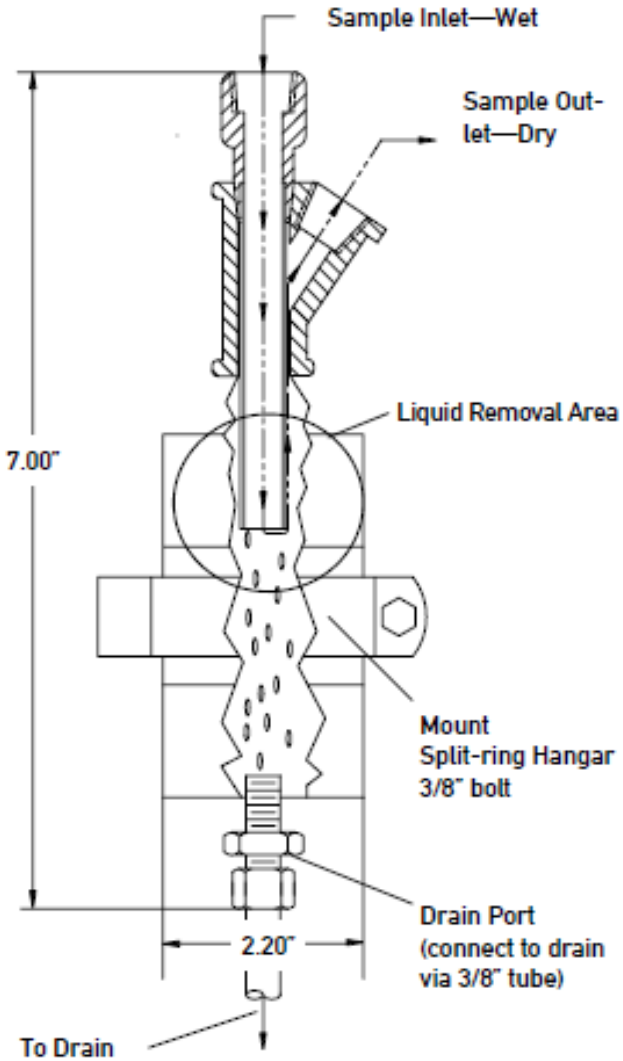

- Removes accumulated liquids and droplets
- Minimizes sample stream pressure drop
- For positive pressure apps – use with restrictor valve
- For vacuum apps – use with autodrain

Neutronics
Gas Analysis Solutions

Water spray scrubber

- Continuously removes soluble contaminants and corrosives
- Available in corrosion resistant materials (Kynar or Stainless Steel)

Water spray scrubber

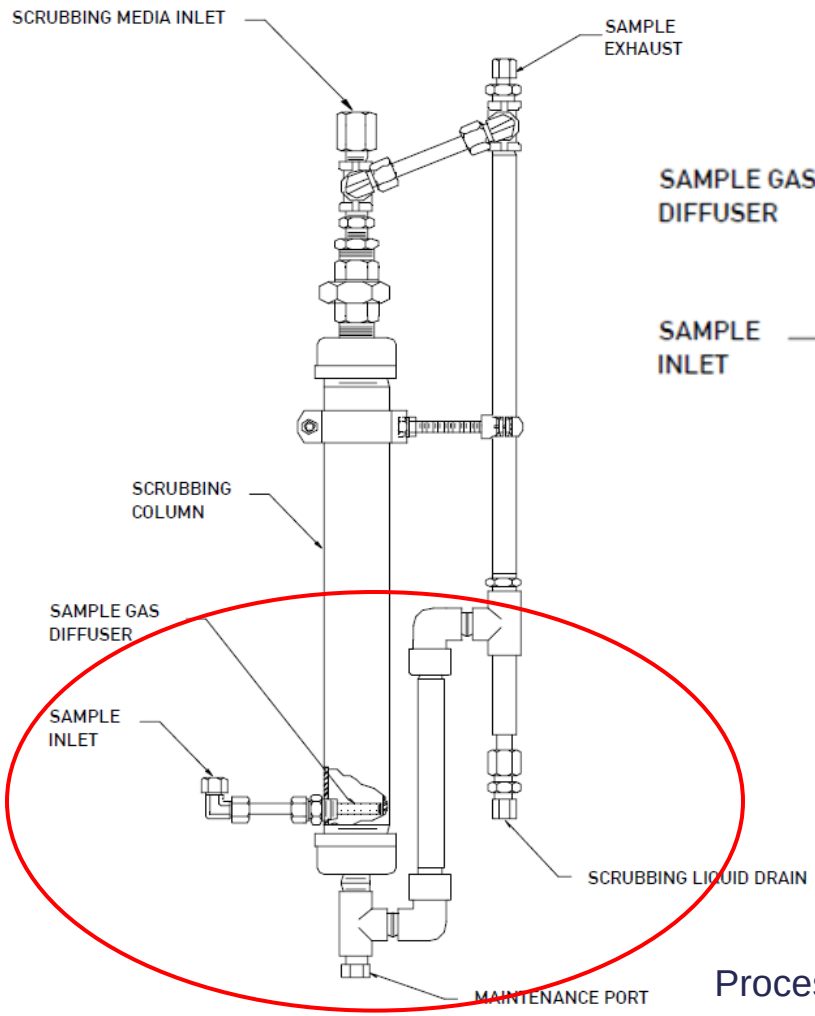

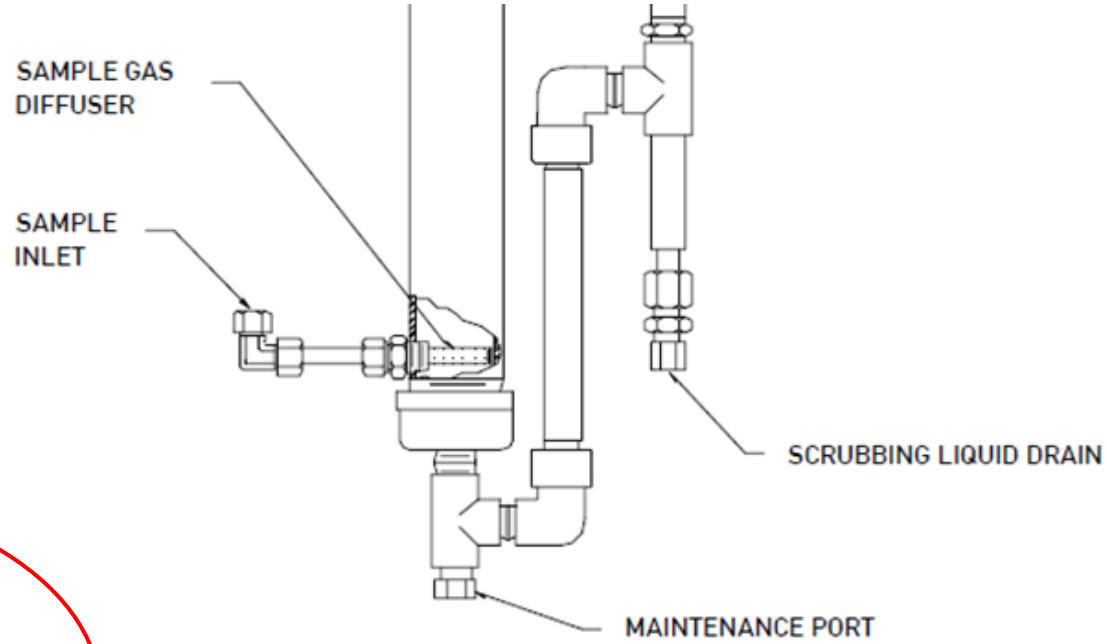

Neutronics
Gas Analysis Solutions

Sample prefilter, liquid trap, or spray scrubber

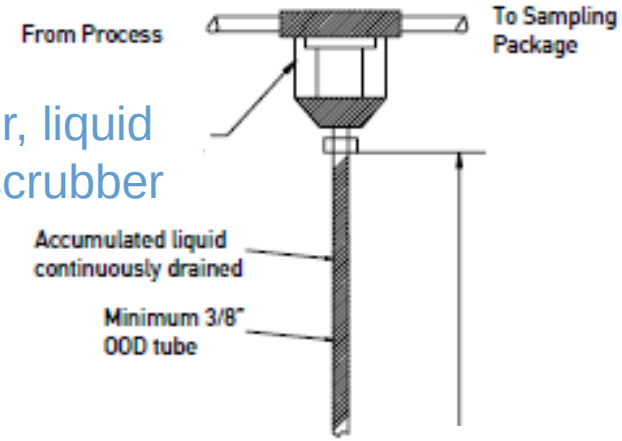

Install autodrain 5‘ (60“) below sample line

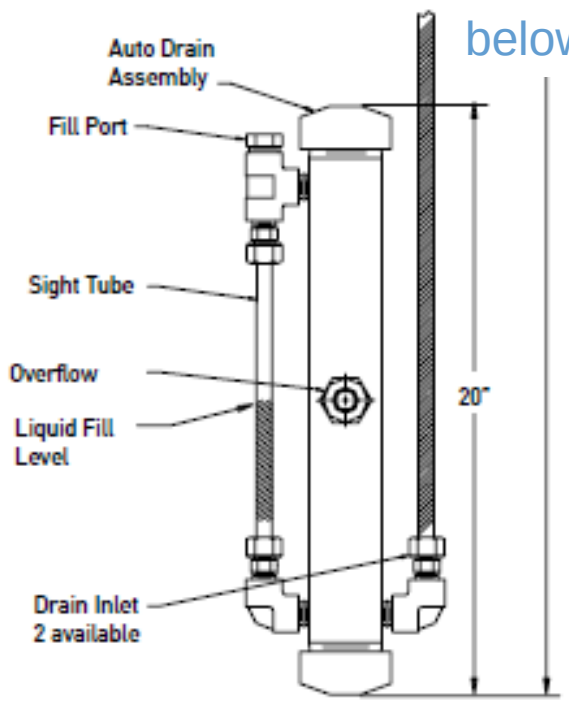

Negative pressure autodrain

- Reduces maintenance by continuously draining liquids from sampling components
- Prevents ambient air from contaminating the sample

Neutronics
Gas Analysis Solutions

Water cooled demister

- Removes solvent droplets, mists and vapors from the sample stream and returns them to the process vessel
- Counter-flow, water-cooled jacket lowers sample temperature and aids in solvent removal

Neutronics
Gas Analysis Solutions

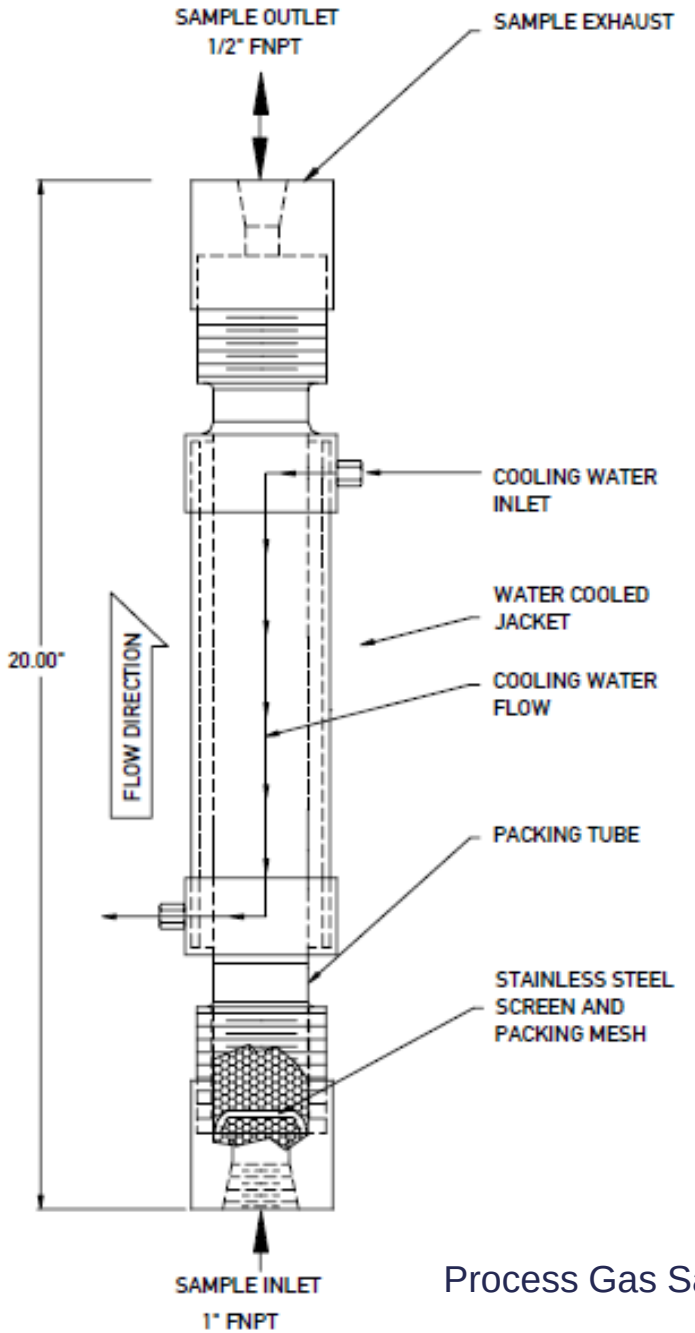
SAMPLE OUTLET
1/2" FNPT
SAMPLE EXHAUST
COOLING WATER
INLET
WATER COOLED
JACKET
COOLING WATER
FLOW
20.00"
FLOW DIRECTION
PACKING TUBE
STAINLESS STEEL
SCREEN AND
PACKING MESH
SAMPLE INLET
1" FNPT

Bubble scrubber

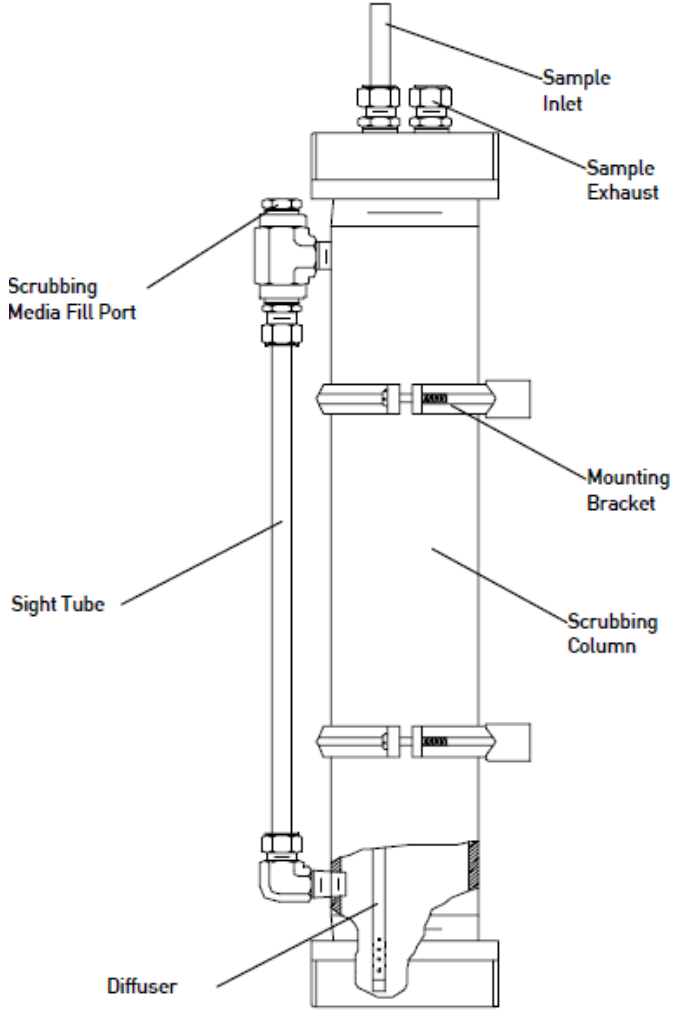

- Removes soluble contaminants and corrosives
- Kynar/Teflon or Stainless Steel MOC
- Scrubbing media (water or neutralizing liquid) requires periodic maintenance
- Vertically mounted

Neutronics
Gas Analysis Solutions

Blowback prefilter

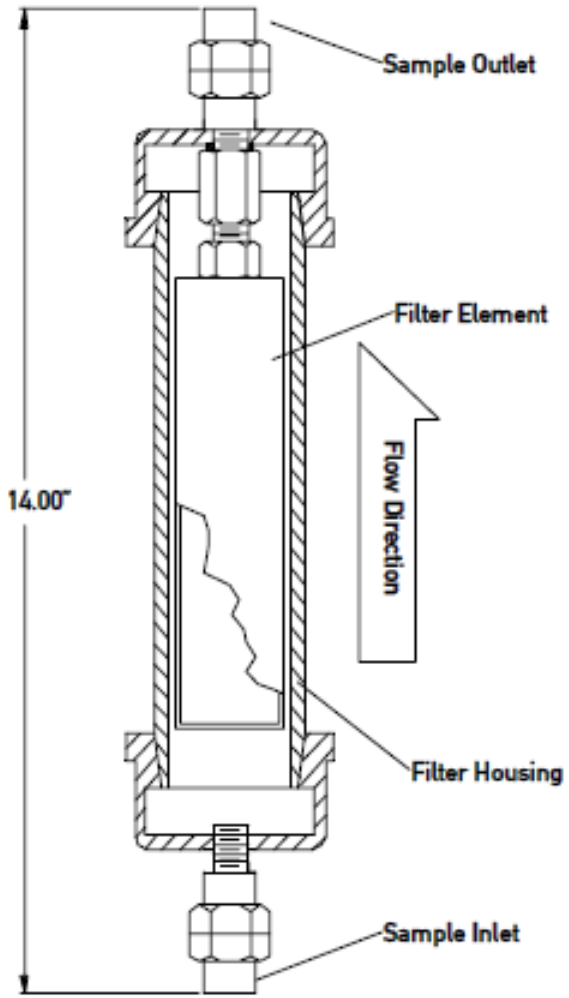

- For powder handling
- Continuously removes large quantities of particulates
- Kynar/Hastelloy C or Stainless Steel MOC
- Removal rating: nominal 0.4m
- Solenoid valve required for blowback mode – pulses air from opposite direction

Neutronics Gas Analysis Solutions

PLUMBING DIAGRAM

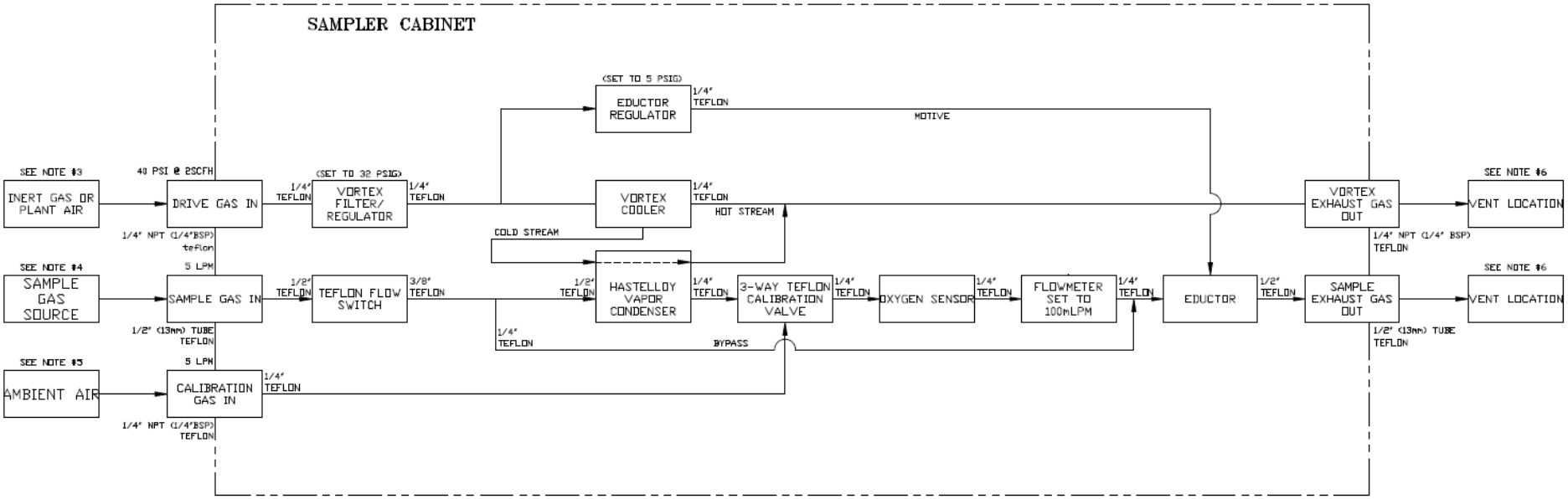

Neutronics Gas Analysis Solutions

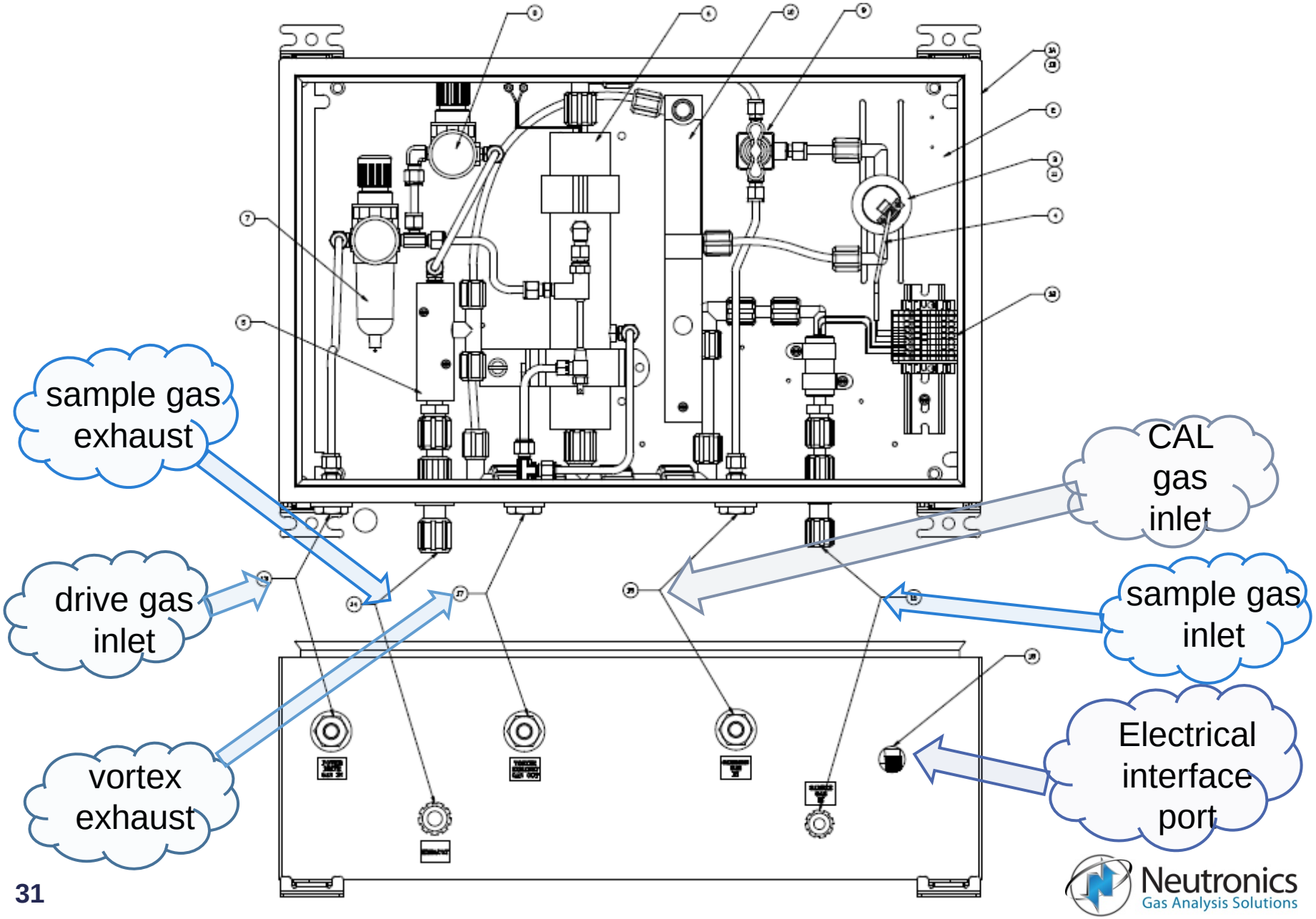

Neutronics
Gas Analysis Solutions

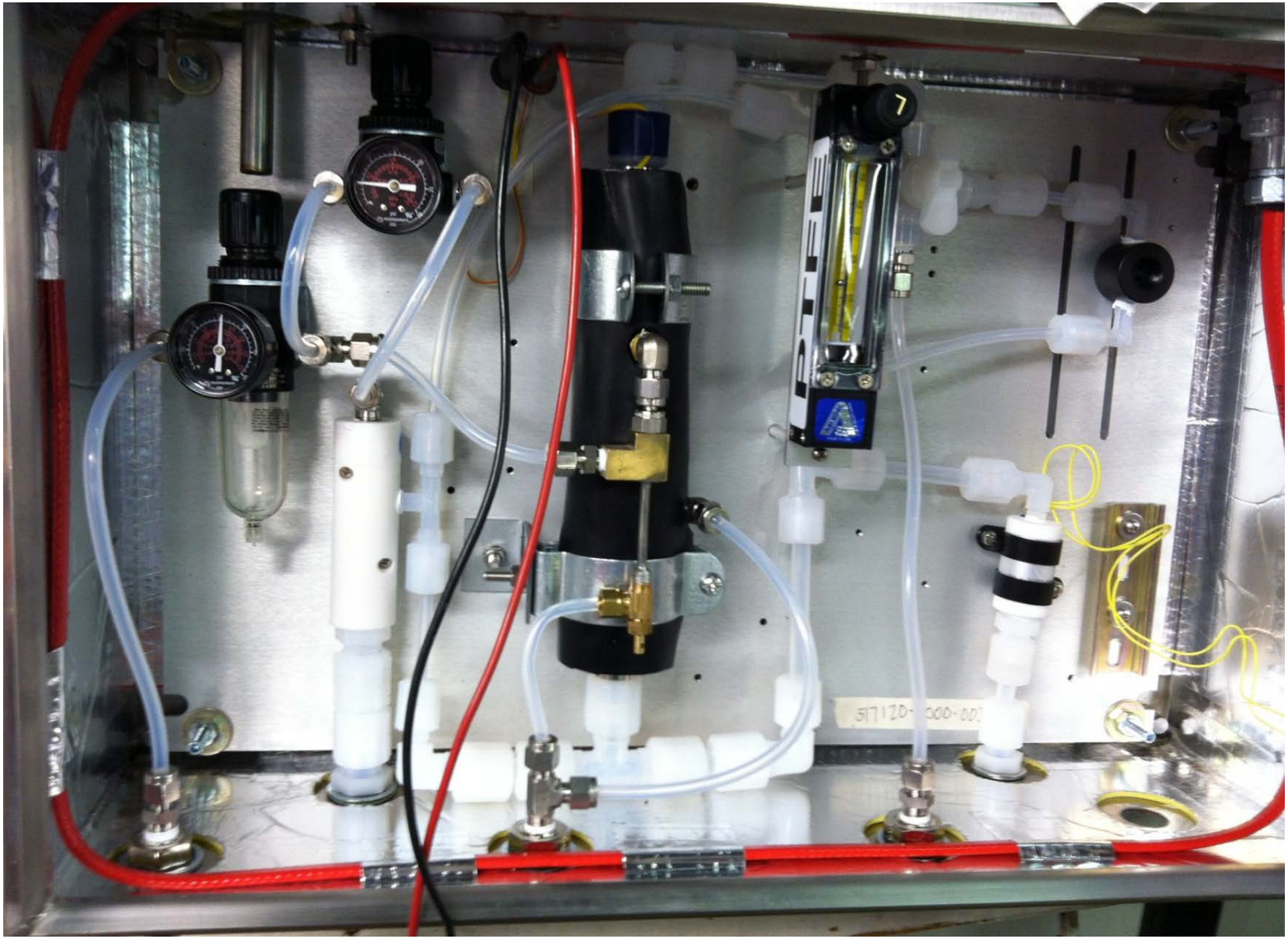

Neutronics
Gas Analysis Solutions